MP SENSOR

ELECTRONIC PRESSURE & VACUUM SWITCH *Product category*

PICO *Type*

-1...0 | -1...1 | -1...10 |0...10 | 0...12 BAR
-14.5...0 | -14.5...14.5 | -14.5...145 |0...145 | 0...174 PSI

DATA SHEET | *ENGLISH*

US LISTED E511277 · CE · IO-Link · drehbar 360° (rotatable 360°)

ELECTRICAL CONNECTION | **BODY** | **PROCESS CONNECTION**

Pin	Assignment
1	Ub+
3	0 V
4	Out 1 / IO-Link
2	Out 2 / Diagnose

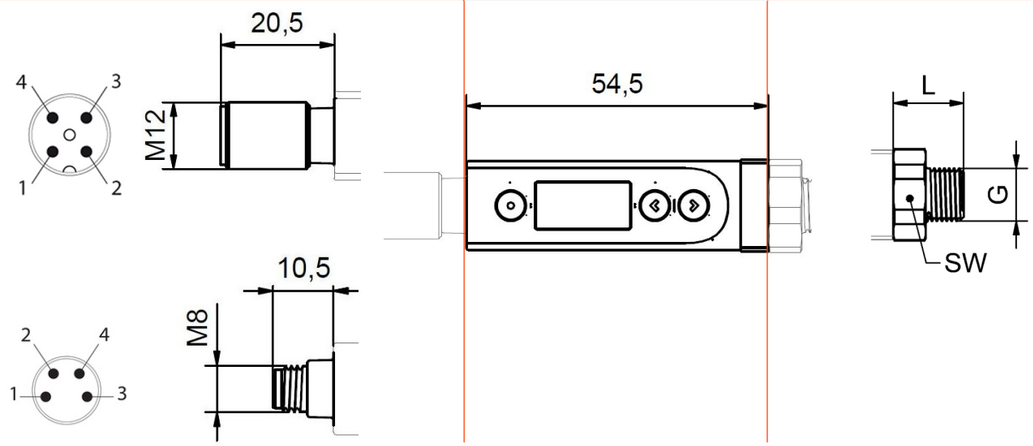

G	L	SW
G1/8“	13	16
NPT1/8“	13	16

General data

Display	Digital display
Switching status display	1x LED each output
IO-Link status display	1 LED
Setting options	Switch points; NO/NC; Hysteresis / window mode; diagnostic mode; On/Off Delay; Pressure unit
Operating medium	Filtered, dry or oiled air and non-corrosive gases
Protection class	IP65
MTTF (40°C)	318 years

Ordering information

1 - 07 - XX XX - XX 3 X XX

Process connection

G1/8“	02
NPT1/8“	04

Electrical connection

M8	01
M12 4-pole	02

Output signal

2x PNP	03
2x NPN	on request

Firmware

Standard	00
Customized	>00

Pressure range

bar	psi	
-1...0	-14.5...0	1
-1...1	-14.5...14.5	2
-1...10	-14.5...145	3
0...10	0...145	4
0...12	0...174	5

Electrical data

Electrical connection	M8x1, 4-pole; M12x1, 4-pole
Operating voltage	10.8...30 VDC (UL: class 2 source only)
Current consumption	< 15 mA / < 3 mA power saving mode
Short-circuit / reverse polarity protection	yes / yes

Output

Output signal	2x PNP (IO-Link is optionally available); 2x NPN (only without IO-Link)
Max. output current	max. 250 mA each output
Output function	NO / NC (programmable)
Operating frequency	200 Hz
Response time	< 2.8 ms
Accuracy (23°C)	± 0,5% FS
max. temperature error	± 1,5% FS (-10°C...60°C)
Repeatability	± 0.2% FS
Long term drift	≤ 0,1% / a

IO-Link

IO-Link specification	Version 1.1
Frame type	2.2
Transmission rate	COM 2 / 38.4 Kbit/s
Process data width	24 bit
Measurement information	16 bit
Switch point information	2 bit
Max. cycle time	5 msec

Mechanical data

Material housing	Plastic PC
Process connection	G1/8”; NPT1/8“
Material process connection	Brass nickel-plated
Mounting position	Any (port downwards when using oiled air)
Weight	26 g

Pressure range

Measuring range					
(bar)	-1...0	-1...1	-1...10	0...10	0...12
(psi)	-14.5...0	-14.5...14.5	-14.5...145	0...145	0...174
max. overpressure*					
(bar)	2		15		
(psi)	29		217.6		

Operating conditions

Operating temperature	Operation: -10°...+60°C (UL: 0°...+60°C) Storage: -20°...+85°C
EMC / interference immunity	EN61000-6-2
EMC / interference emission	EN61000-6-4
UL approval	E511277

*overpressure not continuously allowed